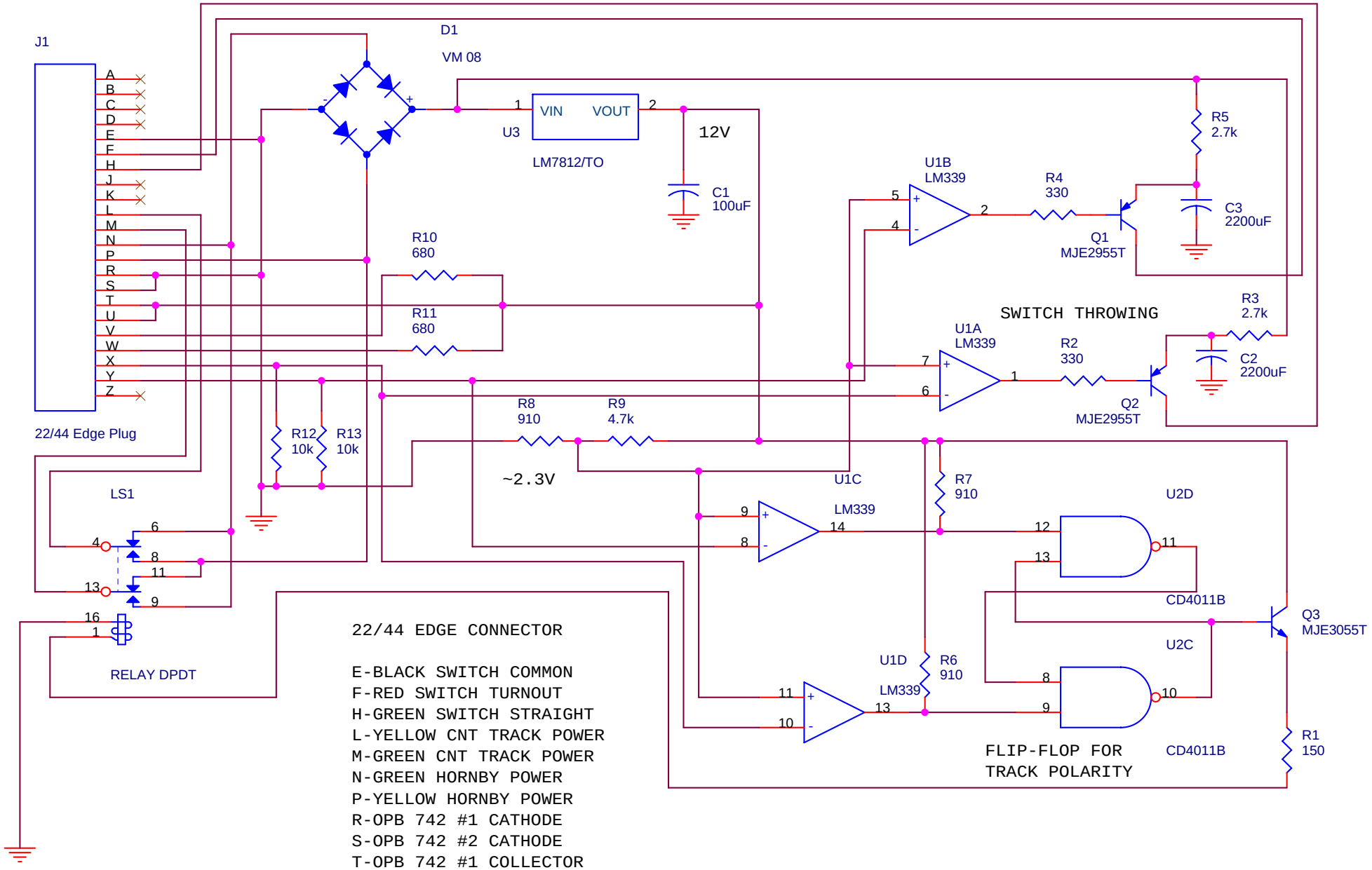


22/44 EDGE CONNECTOR

E-BLACK SWITCH COMMON
F-RED SWITCH TURNOUT
H-GREEN SWITCH STRAIGHT
L-YELLOW CNT TRACK POWER
M-GREEN CNT TRACK POWER
N-GREEN HORNBY POWER
P-YELLOW HORNBY POWER
R-OPB 742 #1 CATHODE
S-OPB 742 #2 CATHODE
T-OPB 742 #1 COLLECTOR
U-OPB 742 #2 COLLECTOR
V-OPB 742 #1 ANODE
W-OPB 742 #2 ANODE
X-OPB 742 #1 EMITTER
Y-OPB 742 #2 EMITTER

| | | |
|---|---|---|
| Title | CENTER TRACK CIRCUIT | |
| Size A | Document Number PRINCETON UNIVERSITY-MAE 412 (der) | Rev A |
| Date: Thursday, January 06, 2005 | Sheet 1 of 1 | |