Severing register from tone: The case for underlying downstep

Florian Lionnet

Princeton University

Theory of Tone Workshop, Paris, 30 Nov 2023

1. Derived Downstep

- Register lowering, setting a lower pitch range ‘ceiling’.

Type		Example
Automatic downstep		/H **L** H H/ → [H L ↓H H]
Downstep (non-automatic)	Floating tone	/H **(L)** H H/ → [H ↓H H]
	Dissimilatory	/H H/ → [H ↓H]

- In all known cases, downstep is derived, not underlying.
- Downstep reveals hidden structure

2. Underlying Downstep

- Sometimes: downstep should be taken at face value
- 4 tonal languages of New Caledonia (Oceanic). Toneme inventories:

	Tones	Downstep	Toneless
Paicî & Cèmuhî	/H/ /L/	/ꜜ/	Ø
Drubea & Numèè		/ꜜ/	Ø

- Non-tonal Xârâcùù (Oceanic, New Caledonia): accent marked by /ꜜ/
- (+ Baga Pukur [Atlantic], cf. Rochant 2023)

Lionnet 2022, in prep. (data in Rivierre 1973, 1974, 1978, 1980); Rochant 2023

3. Paicî

- Lexical contrast: **H vs. L**
- Minimal pairs (NB: 95% of lexicon = isotonic):

1μ	/í/	‘to cry’	/ì/	‘louse’
	/mṵ̃/	‘smoke’	/mṳ̃/	‘flower’
2μ	/kóó/	‘humidity, cold’	/kòò/	‘tree *sp.*’
	/pã̰dí/	‘to hit, to thrash’	/pã̰dì/	‘to divide’
3μ	/pwáái/	‘to fill, to load’	/pwàài/	‘tree *sp.*’
	/údʌ́rɨ́/	‘to catch on fire’	/ùdʌ̀rɨ̀/	‘to disjoin’
4μ	/tɔ́ɔ́wą̃rı̃/	‘to accompany (music) in rhythm’	/tɔ̀ɔ̀wą̃rı̃/	‘to reimburse’

Rivierre 1974; Lionnet 2022

3. Paicî: tonal enclitics

(1) H/L enclitics

[pá =dɔ́] 'jump =upward'

[àgɔ̀ =dɔ̀] 'take =upward'

3. Paicî: tonal enclitics

(1) H/L enclitics → Toneless

[pá =dɔ́]	'jump =upward'	/pá =**dɔ**/
[àgɔ̀ =dɔ̀]	'take =upward'	/àgɔ̀ =**dɔ**/

3. Paicî: tonal enclitics

(1) H/L enclitics → Toneless

[pá =dɔ́]	'jump =upward'	/pá =**dɔ**/
[àgɔ̀ =dɔ̀]	'take =upward'	/àgɔ̀ =**dɔ**/

(2) H/↓L enclitics

[pá =wá̰]	'jump = at/in'
[àgɔ̀ =↓wà̰]	'take = at/in'

3. Paicî: tonal enclitics

(1) H/L enclitics → Toneless

[pá =dɔ́]	'jump =upward'	/pá =dɔ/
[àgɔ̀ =dɔ̀]	'take =upward'	/àgɔ̀ =dɔ/

(2) H/↓L enclitics

[pá =wá̰]	'jump = at/in'
[àgɔ̀ =↓wà̰]	'take = at/in'

(3) L/↓L enclitics

[pá =ì]	'jump =the…'
[àgɔ̀ =↓ì]	'take =the…'

3. Paicî: tonal enclitics

(1) H/L enclitics → Toneless

[pá =dɔ́] 'jump =upward' /pá =dɔ/

[àgɔ̀ =dɔ̀] 'take =upward' /àgɔ̀ =dɔ/

(2) H/ˬL enclitics → Downstepped & toneless

[pá =wá̰] 'jump = at/in' /pá =ˬwa̰ …/

[àgɔ̀ =ˬwà̰] 'take = at/in' /àgɔ̀ =ˬwa̰ …/

(3) L/ˬL enclitics → Downstepped & L-toned

[pá =ì] 'jump =the…' /pá =ˬì …/

[àgɔ̀ =ˬì] 'take =the…' /àgɔ̀ =ˬì …/

3. Paicî: tonal enclitics

- Register ≠ tone (building on Snider's 1999, 2020 Register Tier Theory)

H/M/L…	*Tonal tier*
τ	*TBU*
l/h	*Register tier*

= transition to higher/lower register
*(**l** ≈ ˬ and **h** ≈ ˫)*

H	L	ˬL	ˬØ	Ø
/pá/	/àgɔ̀/	/=ˬì/	/=ˬwą̃/	/=dɔ/
H pa	**L** agɔ	**L** i **l**	wą̃ **l**	dɔ

3. Paicî: tonal enclitics

- Illustration with downstepped L-toned enclitic /=ˡwa̰/

(1) /agɔ =wa̰.../ → agɔ =wa̰... [àgɔ̀ =ˡwà̰...] 'take =at/in'

(2) /pa =wa̰.../ → pa =wa̰ [pá =wá̰] 'jump =at/in'

***H/l** (no downstep if H is present in prosodic word)

4. Drubea & Numèè

- Rivierre: **L vs. H contrast** with marked L (Drubea examples)
  - **L** = lower than preceding tone (be it H or L):

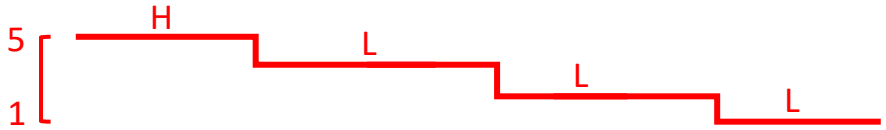

(1)	ɲí	mwà̰	tà̰à̰	pwàa
	(s)he	PFV	untie	package

  - **H** = same pitch as preceding tone, (be it H or L):

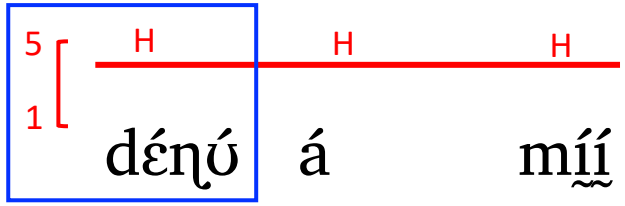

(2)	dɛ́ɳʊ́	á	mɪ̃ɪ̃́
	jaw	REL	low

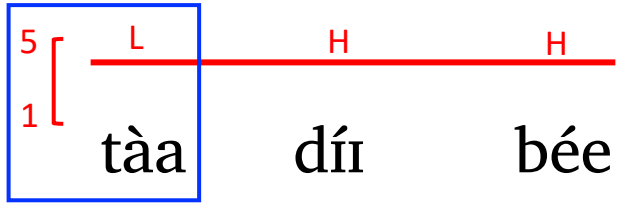

(3)	tàa	dɪ́ɪ	bée
	one	small	fish

This is not how H and L typically behave!

Rivierre 1973: 126, 132, 145

4. Drubea & Numèè

- Rivierre (1973: 153):
  - ‘Th[e downward] **contrastive nature of the L tone** is more essential to its definition than its pitch height.’
  - ‘The **H tone** is itself best defined as a syllable that **does not mark such a contrast** than as a high-pitched syllable.’
- This is not about (relative) pitch → **not tone, but register:**
  - L = downstep: /ꜜ/
  - H = register-less: **Ø**

Rivierre 1973: 153

4. Drubea & Numèè

- Register ≠ tone (building on Snider's 1999, 2020 Register Tier Theory)

H/M/L…	*Tonal tier*
|	
τ	*TBU*
|	
l/h	*Register tier*

= *transition to higher/lower register*
(***l*** ≈ ↓ *and* ***h*** ≈ ↑)

Drubea & Numèè:

σ	*vs.*	**σ**
|		
l		

No tones
Only register feature

Snider 1999, 2020; Lionnet 2022

4. Drubea & Numèè: register analysis

At baseline:
(1) Ø + no following downstep
(2) downstep not realized utterance-initially
(nothing to contrast with)

Higher than baseline
in anticipation of the following three downsteps

baseline

(1)	dɛɳʊ	a	miḭ	(2)	taa	dɪɪ	bee	(3)	ɲi	↓mwã̰	↓tã̰ã̰	↓pwaa
					|					|	|	|
					1					1	1	1

Ø → variable, adjustable:
- By default: same pitch as baseline or preceding tone
- Higher than baseline or preceding tone, if necessary to maximize contrast of following downstep

Rivierre 1973: 126, 132, 145

4. Drubea & Numèè: alternative

Problem: one expects H and L to contrast utterance initially

Raising of H before L
(crosslinguistically frequent)

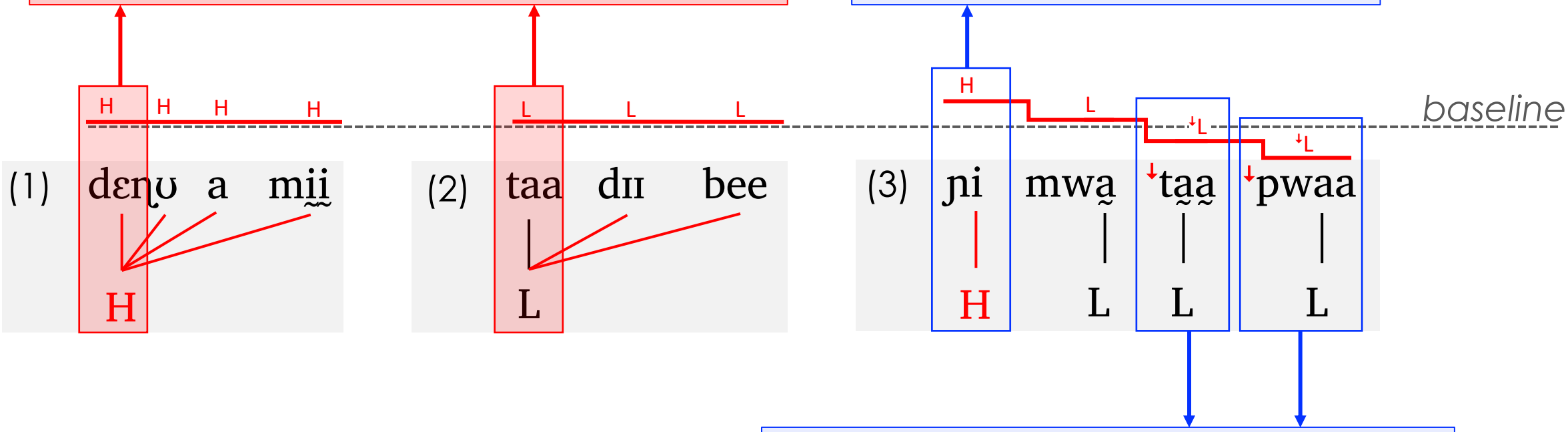

OCP-tone
- solved by downstep insertion: *LL → LꜜL
- Surface / postelxical OCP-tone

Rivierre 1973: 126, 132, 145

4. Drubea & Numèè

Problems with alternate L tone + OCP approach:

- General postlexical/surface OCP-tone = suspicious
- No representational economy:

	L + OCP analysis	**Downstep analysis**
Underlying	1 toneme = /L/ (vs. Ø)	1 toneme = /ꜜ/ (vs. Ø)
Surface	3 tones/registers: [H] [L] [ꜜ]	1 register = [ꜜ] (+ interpolation)

- Misses a generalization: "L" is always realized lower than preceding "L"
  - <u>In the L+OCP analysis</u>, this is not in the nature of the toneme (=L), but the result of an independent OCP constraint
  - <u>In the downstep analysis</u>, it is in the nature of the toneme (downstep) → this is straightforwardly accounted for, no need for an additional OCP constraint

Conclusion

- In at least some languages, downstep is a toneme
- This suggests that register features (à la Snider 1999/2020)
  - may exist underlyingly
  - may be independent from tone (≠ Snider 1999/2020)
    - coexist with tone
    - exist in the absence of tone
- This is attested in few languages so far (& is possibly areal):
  - All tonal languages of New Caledonia (also accentual Xârâcùù)
  - Also recently proposed for Baga Pukur (Atlantic, Niger-Congo; Rochant 2023)
- There are likely to be other cases out there!

THANK YOU!

References

- Lionnet, Florian. 2022. “Tone and downstep in Paicî (Oceanic, New Caledonia)”. Phonological Data and Analysis 4(1): 1-47. DOI: 10.3765/pda.v4art1.45
- Rivierre, Jean Claude. 1973. Phonologie comparée des dialectes de l'extrême-sud de la Nouvelle Calédonie. (Langues et civilisations à tradition orale, 5.) Paris: SELAF. 214pp.
- Rivierre, Jean-Claude. 1974. Tons et segments du discours en paicî (Nouvelle-Calédonie). Bulletin de la Société de Linguistique de Paris 69(1). 325–340.
- Rivierre, Jean-Claude. 1978. Accents, tons et inversion tonale en Nouvelle-Calédonie. Bulletin de la Société de Linguistique de Paris 73(1). 415–43.
- Rivierre, Jean-Claude. 1980. La langue de Touho: Phonologie et grammaire du Cèmuhî (Nouvelle Calédonie) (Langues et Civilisations à Tradition Orale 38). Leuven: Peeters.
- Rochant, Neige. 2023. A Bilectal Grammar of Baga Pukur: An Atlantic Language of Guinea. Ph.D. Dissertation, Université Sorbonne Nouvelle, Paris.
- Snider, Keith L. 1999. The geometry and features of tone (1st edition). Dallas: SIL International and University of Texas at Arlington.
- Snider, Keith L. 2020. The geometry and features of tone (2nd edition). Dallas: SIL International.