SYSTEM WIRING DIAGRAMS
4.0L, Engine Performance Circuits (1 of 3)
1995 BMW 740iL

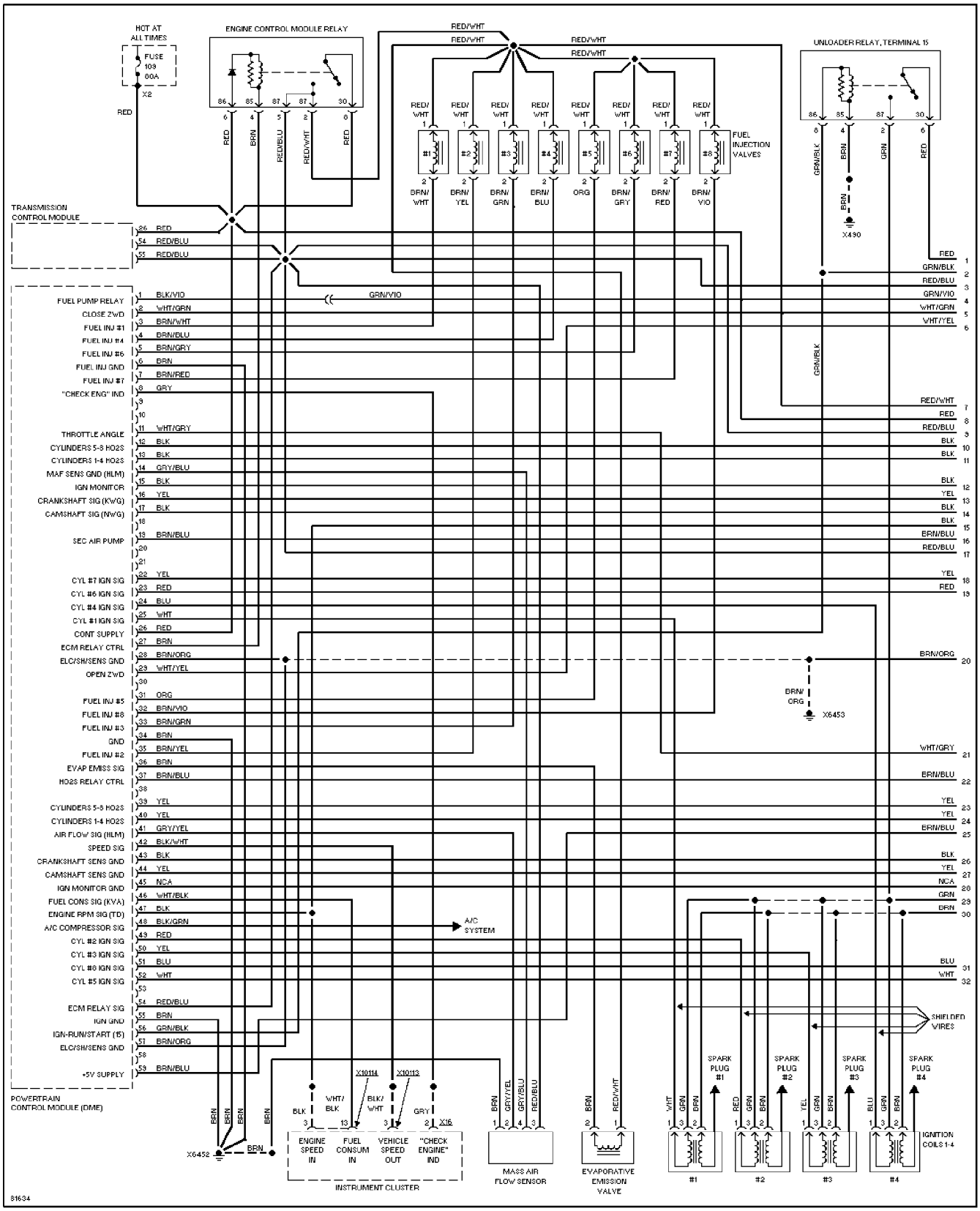

SYSTEM WIRING DIAGRAMS
4.0L, Engine Performance Circuits (2 of 3)
1995 BMW 740iL

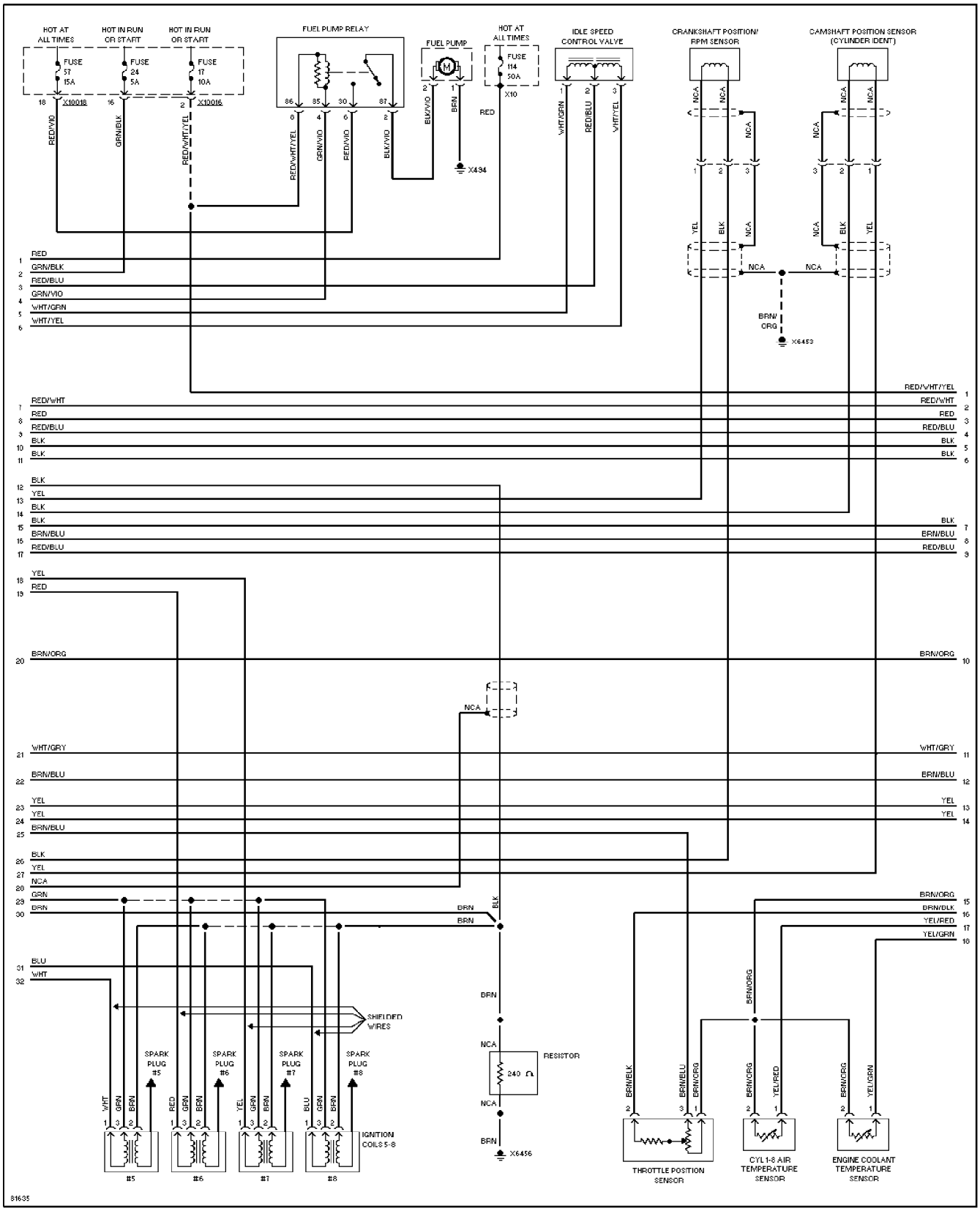
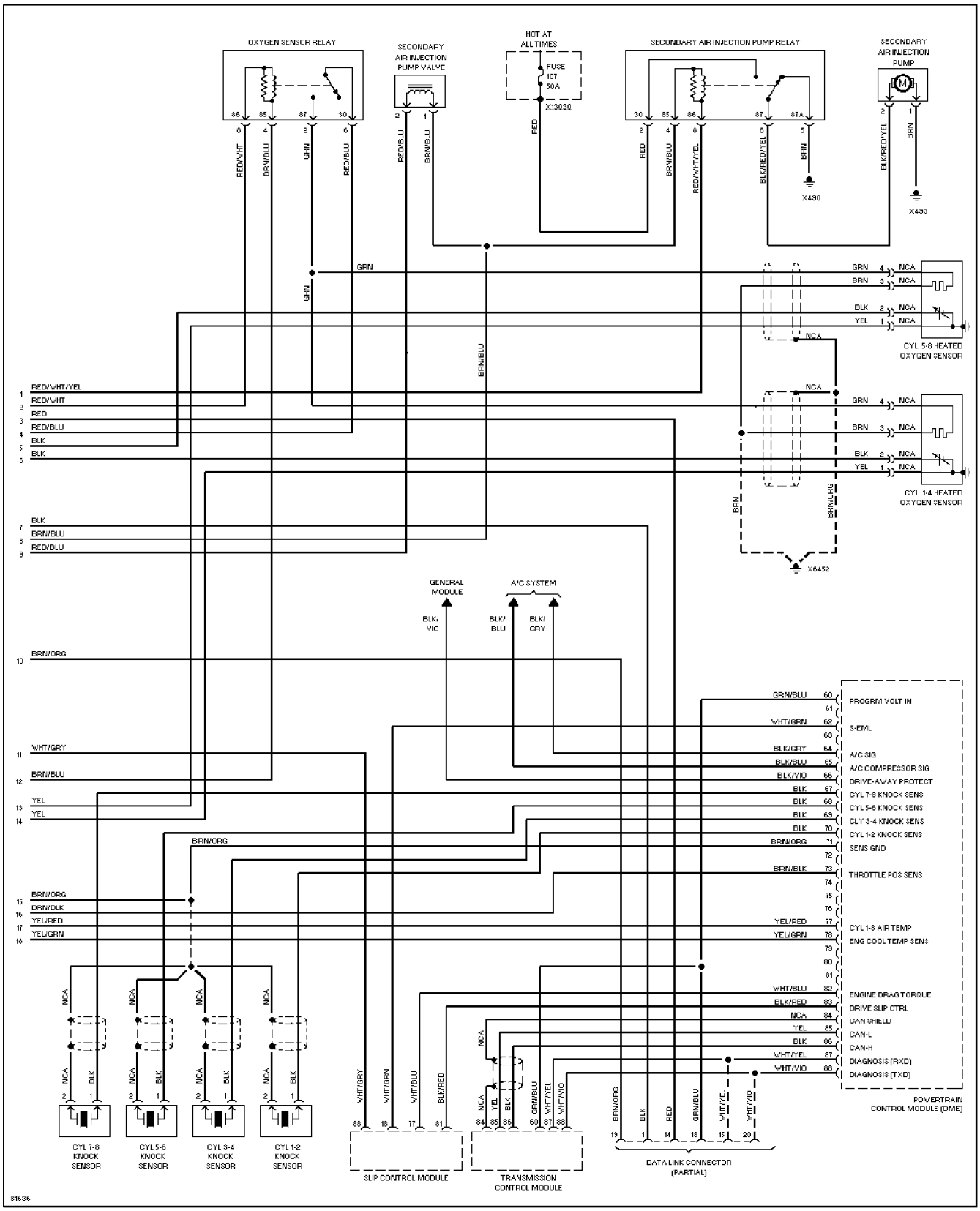
SYSTEM WIRING DIAGRAMS
4.0L, Engine Performance Circuits (3 of 3)
1995 BMW 740iL